BLE/UART/USB Transceiver Module BLE2U

Manual

Version: 1C

http://wch.cn

1. Overview

The BLE/UART/USB transceiver module (BLE2U) is developed based on CH9143 to implement data transmission between BLE, USB interface and UART. The BLE supports master mode, slave mode and master-slave mode. BLE communication and parameters can be configured in slave mode and master-slave mode, and BLE4.2 is supported. The UART supports AT command configuration and MODEM signals. The baud rate can be up to 1Mbps. It can implement online debug or data monitor between computer USB interface, serial port and Bluetooth at the same time.

USB and BLE virtual serial port technology. A virtual serial port driver is provided on the computer, shielding the underlying technical details of BLE and USB, with no secondary development required. It is compatible with common serial port applications and serial debug tools, easy to implement transmission between 3 "serial ports".

BLE2U product selection:

Part No.	Apperance	Features
BLE2U-A-ANT	BLE2U-A	Onboard antenna Small size Built-in 32M crystal.
BLE2U-C-ANT	BLE2U-C 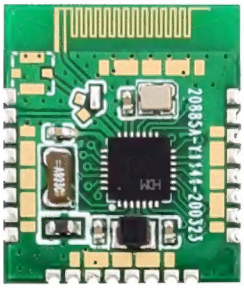	Onboard antenna All functional pins Built-in 32M and 32K crystals.

Some application block diagrams of CH9143:

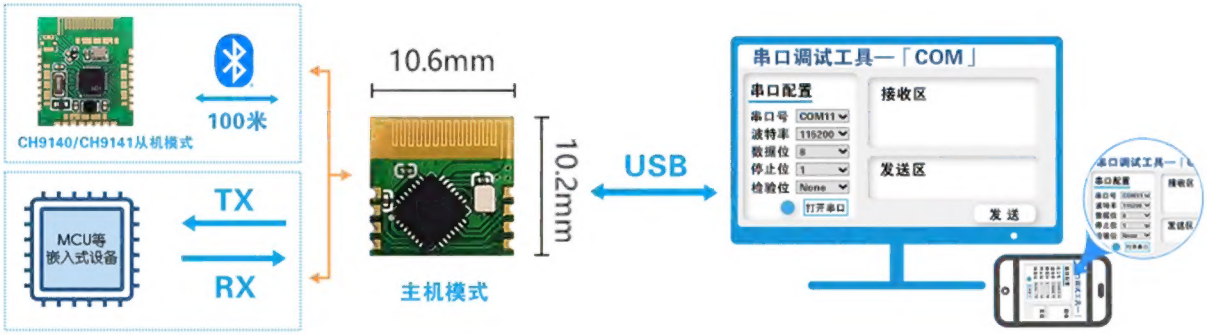

Figure 1 Block diagram of serial communication between CH9143 USB and BLE slave or UART device

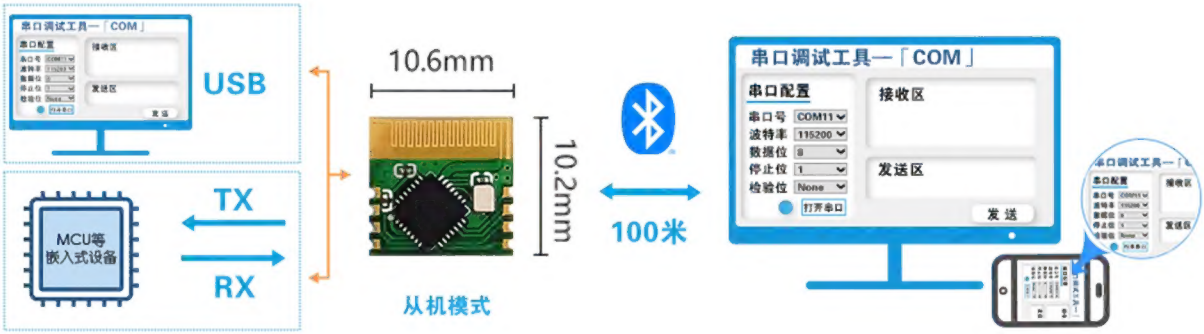

Figure 2 Block diagram of serial communication between BLE host and USB host or UART device through CH9143

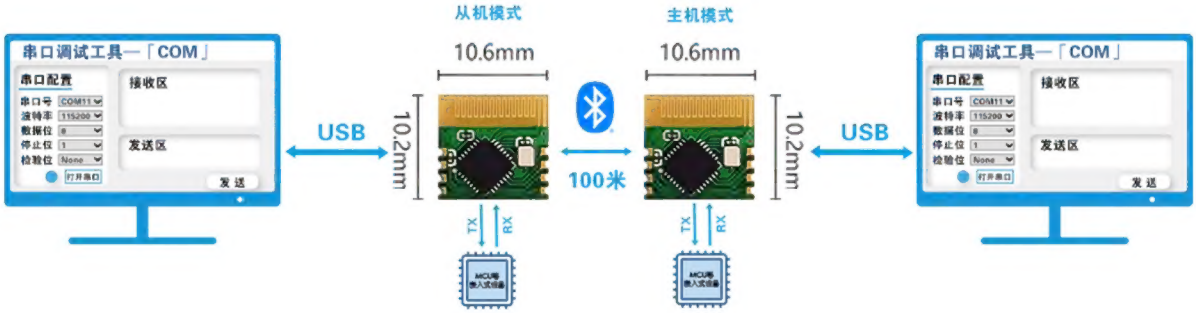

Figure 3 Block diagram of serial communication between USB hosts through CH9143 in BLE master-slave mode

2. Features

- Data transmission between BLE, USB, and UART.
- BLE supports slave mode, master mode and master-slave mode.
- Provides PC-side USB and BLE virtual serial port driver.
- Compatible with existing serial port software and tools, with no secondary development required.
- Supports BLE host connection in Windows/Linux/Android/iOS and other systems.
- 2 serial port driver modes: Vendor driver mode and installation-free USB-CDC driver mode.
- 100m BLE transmission distance.
- Adjustable 8 positions of BLE TX power.
- Supports 3.3V and 2.5V operating voltages.
- Supports BLE transmission configuration and serial AT command configuration.
- Asynchronous serial port default baud rate is 115200bps.
- Serial port supports MODEM signals: RTS, DTR, DCD, RI, DSR and CTS.
- Serial port supports 5/6/7/8 data bits and 1/2 stop bits.
- Serial port supports odd, even, no parity, space 0 and mark 1.
- Full-speed USB device interface, compatible with USB V2.0.

3. Package size and pins of BLE2U-A

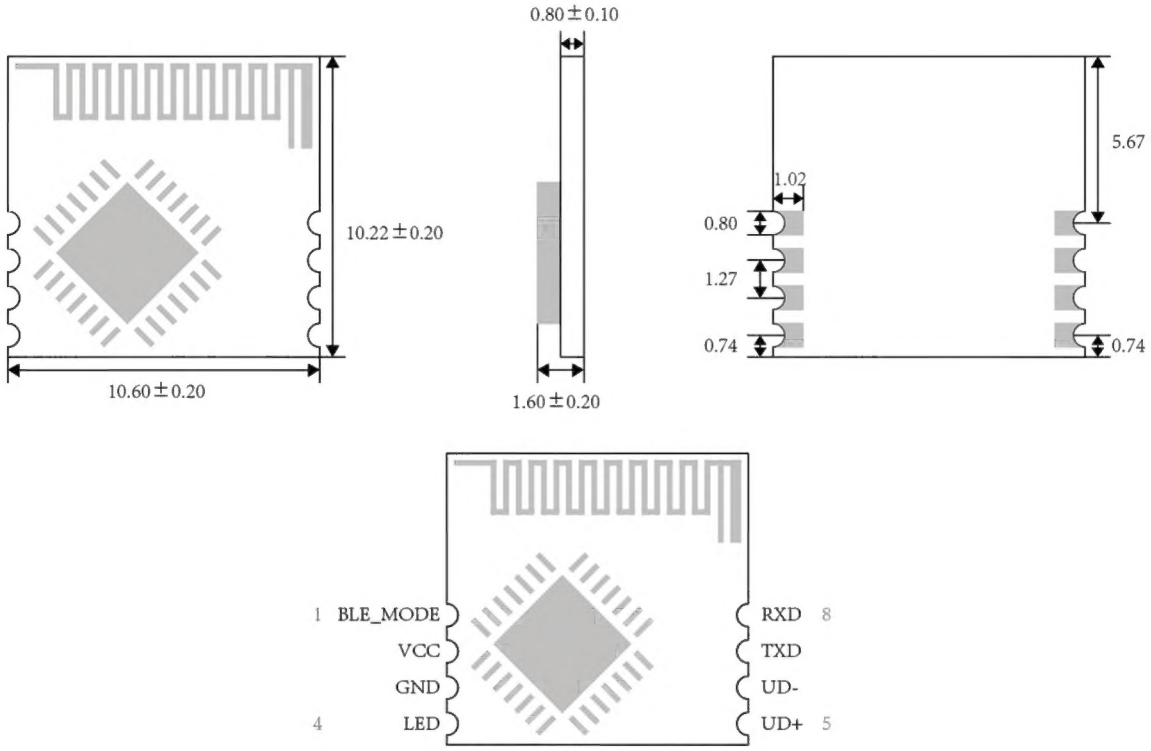

Pin No.	Pin Name	Pin Type	Description
1	BLE_MODE	I	BLE mode selection, with built-in pull-up resistor Low level: Slave mode. High level: Master-slave mode.
2	VCC	P	Power input
3	GND	P	Ground
4	LED	O	Module status and data receive/transmit indication output pin, active low
5	UD+	USB signal	USB D+ data line
6	UD-	USB signal	USB D - data line
7	TXD	O	UART transmit pin
8	RXD	I	UART receive pin

Note: P: Power. I: Input. O: Output.

4. Recommended bonding pad size for BLE2U-A

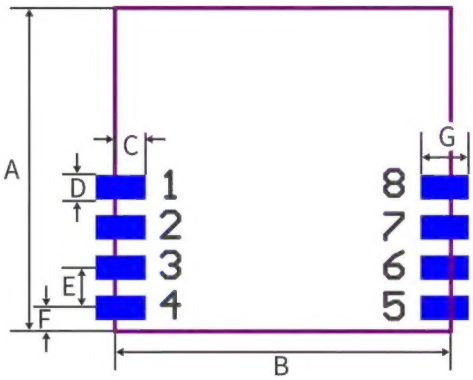

Symbol	Value	Unit
A	10.22	mm
B	10.6	
C	1.02	
D	0.8	
E	1.27	
F	0.74	
G	1.7	

5. Package size and pins of BLE2U-C

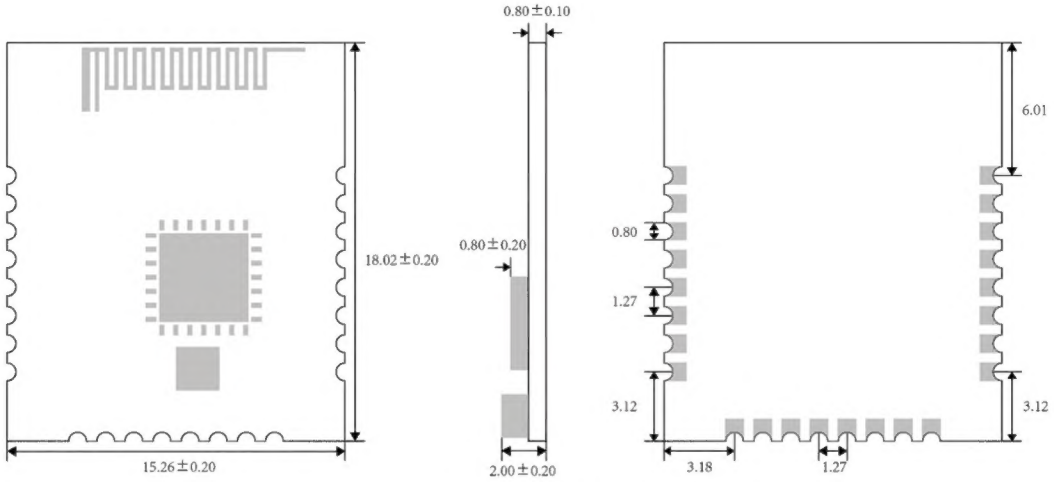

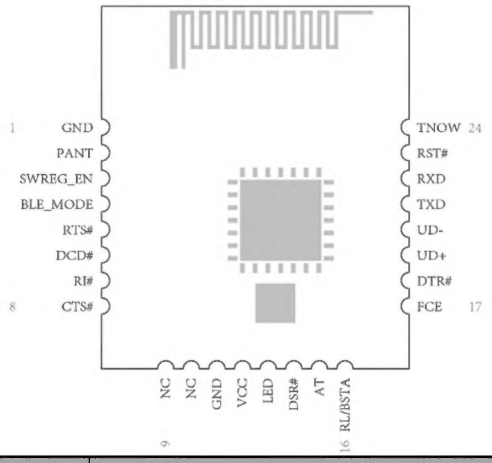

Pin No.	Pin Name	Pin Type	Description
1	GND	P	Ground
2	PANT	A	Optional pin to connect antenna externally (Note 2)
3	SWREG_EN	I	Internal DC-DC power enable, with built-in pull-up resistor Enabled when at low level
4	BLE_MODE	I	Bluetooth mode selection, with built-in pull-up resistor Low level: Slave mode. High level: Master-slave mode.
5	RTS#	O	UART MODEM output signal, request to send, active low
6	DCD#	I	UART MODEM input signal, data carrier detection
7	RI#	I	UART MODEM input signal, ring indicator
8	CTS#	I	UART MODEM input signal, clear to send, active low
9	NC	N	Suspended pin. Do not connect to it.
10	NC	N	Suspended pin. Do not connect to it.
11	GND	P	Ground
12	VCC	P	Power input
13	LED	O	Chip status and data receive/transmit indication output pin, active low
14	DSR#	I	UART MODEM input signal, data device ready

15	AT	I	AT transparent transmission function switch pin: Low level: AT mode. High level: Transparent transmission mode
16	RELOAD /BLESTA	I/O	Restore factory setting input pin (RELOAD) when powered on, Restore the factory settings after a low level is detected for 2 seconds continuously. BLE connection status indication signal output pin (BLESTA) after powered on. It outputs low level when not connected, while it outputs high level when connected.
17	FCE	I	CTS/RTS flow control enable, active low, with built-in pull-up resistor
18	DTR#	O	UART MODEM output signal, data terminal ready
19	UD+	USB signal	USB D + data line
20	UD-	USB signal	USB D - data line
21	TXD	O	UART transmit pin
22	RXD	I	UART receive pin
23	RST#	I	Reset pin, active low
24	TNOW	O	UART transmit status pin, active high

Note (1): P: Power. A: Analog. I: Input. O: Output. N: No connection.

Note (2): To use an external antenna, the user can connect the PANT pin to the antenna pin through the reserved resistor pad. Re-solder the resistor which connects the antenna pin to on-board antenna, to connect the antenna pin to the PANT pin.

6. Recommended bonding pad size for BLE2U-C

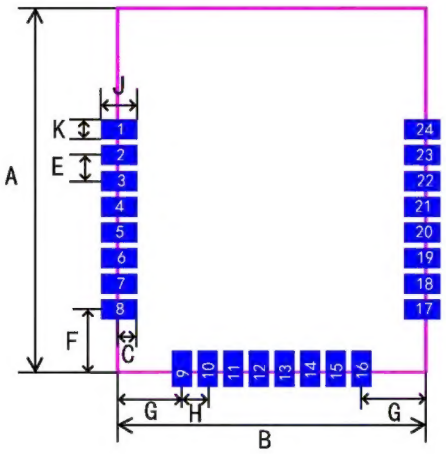

Symbol	Value	Unit
A	18.02	mm
B	15.26	
C	0.99	
E	1.27	
F	3.12	
G	3.18	
H	1.27	
J	1.8	
K	1	

7. Layout

The upper part of the module is the onboard antenna, and the layout of antenna is related to quality of wireless communication. Good communication quality can ensure a stable data transmission rate. The module can run separately without extra ground plane, but when it is installed on the other PCB, it should be noted: Antenna area must be far away from other metal components, and the distance must be greater than 20mm. Any conductor near the antenna may seriously affect the antenna radiation pattern.

The figure below shows the reference layout of the module. The first three cases are correct, as long as the ground plane does not exceed the ground plane edge of the module. The last three cases are incorrect. The example on the left is incorrect because there is a ground plane under the antenna, the middle example is incorrect because there is not enough gap around the antenna, and the last example is incorrect because battery metal casing is not far away from antenna area.

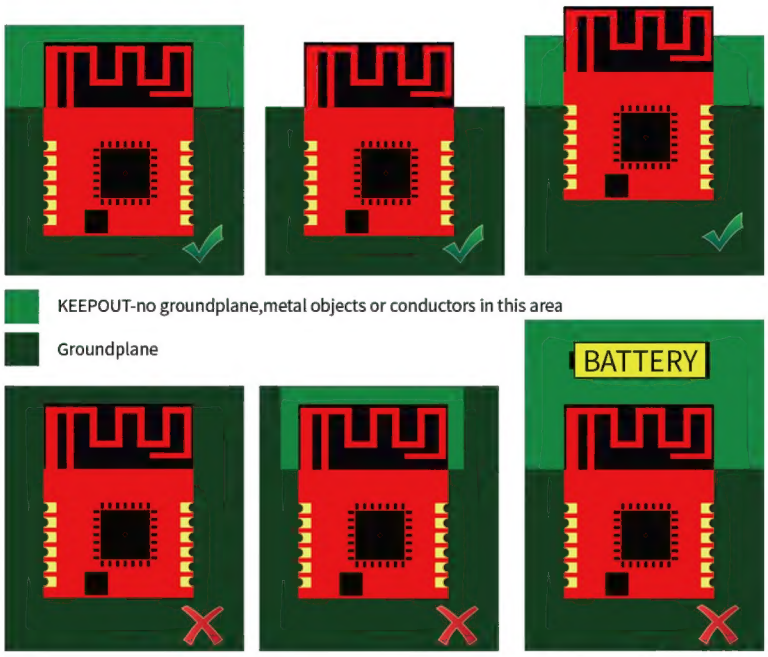

8. Functional description

8.1 Smart pairing

When the CH9143 is in master-slave mode, it can be paired with the designated CH914x without inputting MAC address through AT command. After successful pairing, the two will establish a binding relationship, and there is no need to re-pair when connecting again.

Pairing process is as follows:
1) The CH9143 is in master-slave mode, and the CH9140/CH9143 is in slave mode or master-slave mode;
2) Both sides need to complete power-up within 3s to establish a pairing;
3) The indicator LED flashes 3 times and then keeps on, indicating that pairing is successful.

If the user needs to re-establish the pairing, repeat the pairing process again. The difference is that the indicator LED in step 3 will flash quickly. In this case, the pairing can be re-established by powering on one side.

8.2 Data transmission

The CH9143 can implement data transmission between UART, USB and BLE. The data received by any one interface will be transmitted to the other 2 interfaces.

The serial port interface is an asynchronous UART. The default setting is 115200bit/s baud rate, 8 data bits, 1 stop bit, no parity and enabled flow control. BLE communication rate is related to its environment, so it is

recommended to use CTS/RTS flow control to prevent buffer overflow when the baud rate exceeds 9600bit/s and the BLE average RSSI is less than -70dBm. The USB interface is a USB2.0 full-speed device, which communicates with PC through analog serial port device, and is compatible with common serial software.

8.3 LED function

List of LED status description

No.	Status	Description
1	once quickly flashes 3 times after powered on	currently in slave mode
2	twice quickly flashes 3 times after powered on	currently in master-slave mode
3	slowly flashes at 500ms intervals	currently in broadcast status
4	keeps on	currently in connection status
5	quickly flashes in connection status	currently performing data transmission
6	quickly flashes in pairing process	has been paired with other devices, need power-up again to complete pairing

For details, please refer to CH9143 datasheet.

9. Schematic diagram for reference

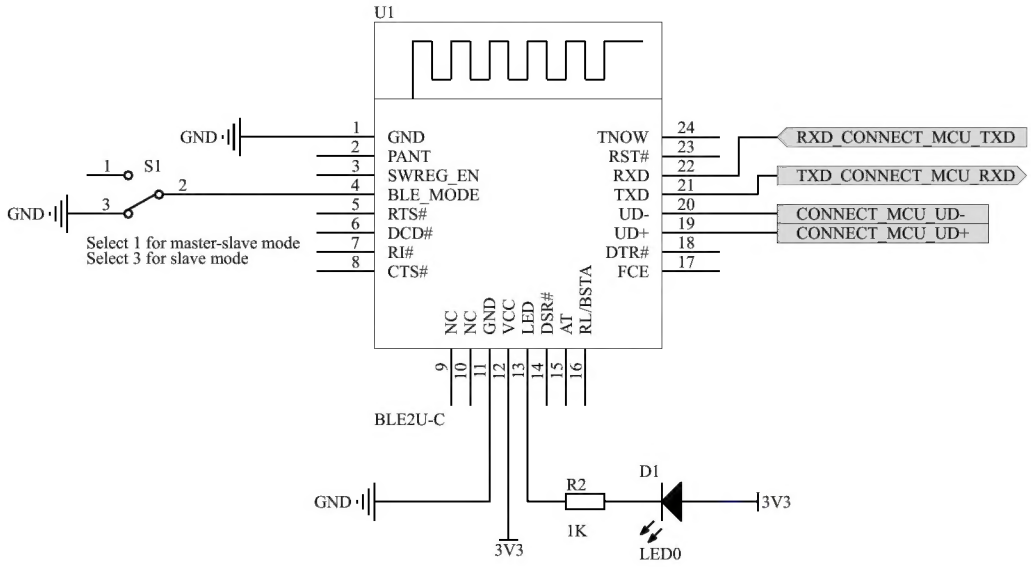

10. Reflow soldering conditions

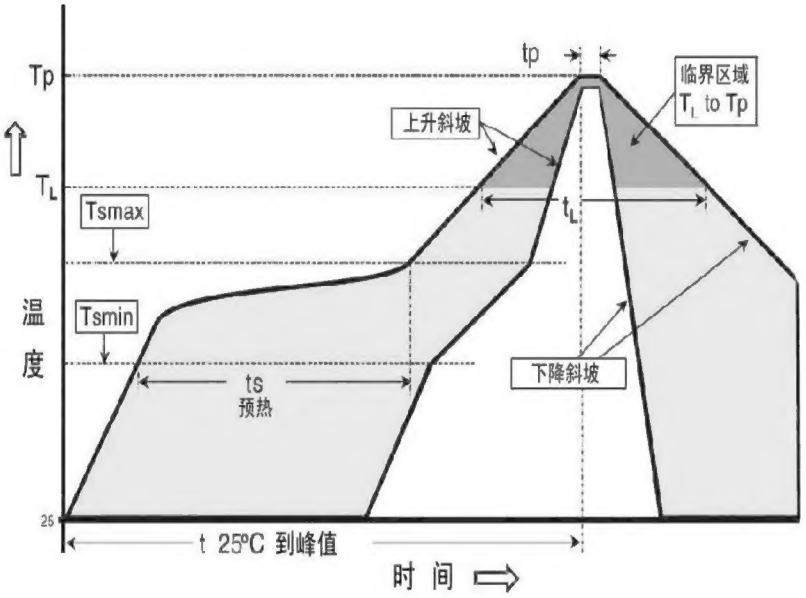

Moisture Sensitivity Level	MSL3
Average slope rise rate (TL to TP)	Max 3°C/s
During warm up Minimum temperature (Tsmin) Maximum temperature (Tsmax) Time (minimum – maximum) (ts)	 150°C 200°C 60-180s
Tsmax – TL slope rise rate	Max 3°C/s
During hold Temperature (TL) Time (tL)	 217°C 60-150s
Peak temperature (Tp)	260+0/-5°C
Time when actual peak temperature is within 5°C (tp)	20-40s
Slope descent rate	Max 6°C/s
Time from 25°C to peak temperature	Max 8 min